OHS Series Bayonet Ultra-small Connector Shell Size 22 32 Pin Female Plug with Tail Attachment (Optional)

Part Number:

OHS-BC-1-32_22-P12-1-B

Basic Information	
Connector Type	Plug
Orientation	Straight
Gender	Female
Number of Positions	32 Pin
Contact Termination	Solder
Fastening Type	Bayonet connection
Contact Size	Φ1.0
Series	OHS Series Bayonet Ultra-Small Connectors
Shell Size	22

Mechanical Specification	
Durability	250

Material Specification	
Shell Material	Aluminum alloy surface anodized treatment
Contact Material	Copper alloy silver plated
Contact Finish	silver plated
Insulation Material	PPS

Electrical Specification

Rated Current	60
Rated Voltage	250V
Contact Resistance	≤5mΩ
Insulation Resistance	≥1000MΩ(under normal conditions)

Environmental Specification

Operating Temperature	-60 to +85 °C

Contact Layout

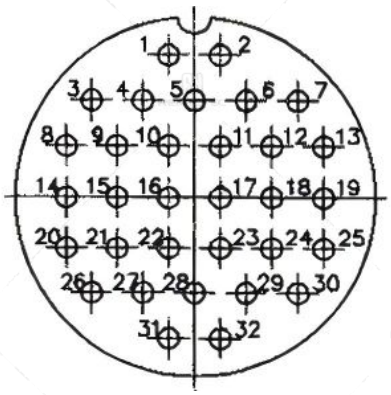

How to Order

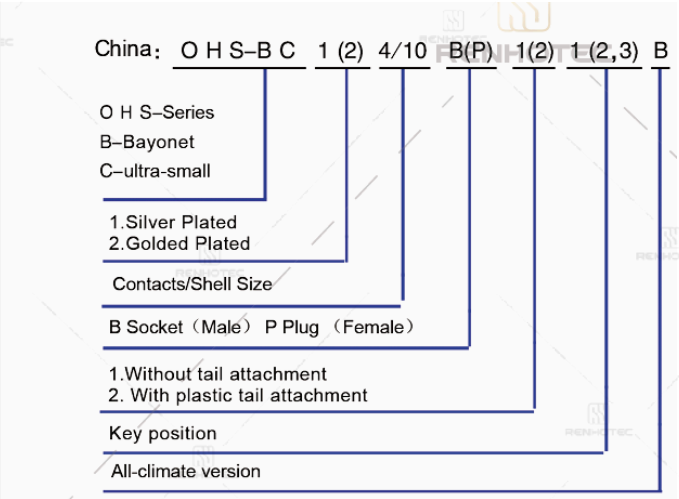

Size

Plug with taill attachments (Female)

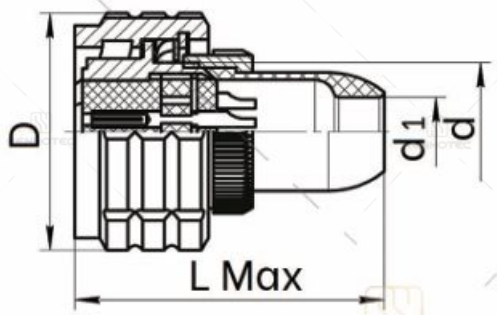

Shell Size	Size(mm)			
	D	d	d 1	Lmax
10	20	M10×0.75	4.5	30
12	21	M12×0.75	6	31
14	24	M14×0.75	7	32
18	27	M18×0.75	9.2	33
22	31	M22×0.75	11	34
27	36	M27×0.75	13	36

Disclaimer

The information in this specification is subject to change without notice. Please confirm the latest version before use. Technical parameters are for reference only, and sufficient testing and verification should be conducted in actual applications.