OHS Series Bayonet Ultra-small Connector Shell Size 12 7 Pin Male Socket

Part Number:

# OHS-BC-1-7_12-B1-1-B

## Basic Information

| | |
|---|---|
| Connector Type | Receptacle |
| Orientation | Straight |
| Gender | Male |
| Number of Positions | 7 Pin |
| Contact Termination | Solder |
| Fastening Type | Bayonet connection |
| Contact Size | Φ1.0 |
| Series | OHS Series Bayonet Ultra-Small Connectors |
| Shell Size | 12 |

## Mechanical Specification

| | |
|---|---|
| Durability | 250 |

## Material Specification

| | |
|---|---|
| Shell Material | Aluminum alloy surface anodized treatment |
| Contact Material | Copper alloy silver plated |
| Contact Finish | silver plated |
| Insulation Material | PPS |

## Electrical Specification

| | |
|---|---|
| Rated Current | 22 |
| Rated Voltage | 250V |
| Contact Resistance | ≤5mΩ |
| Insulation Resistance | ≥1000MΩ(under normal conditions) |

## Environmental Specification

| | |
|---|---|
| Operating Temperature | -60 to +85 °C |

## Contact Layout

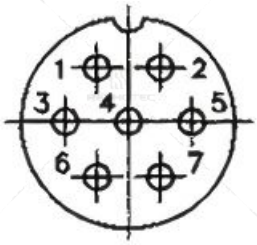


## How to Order

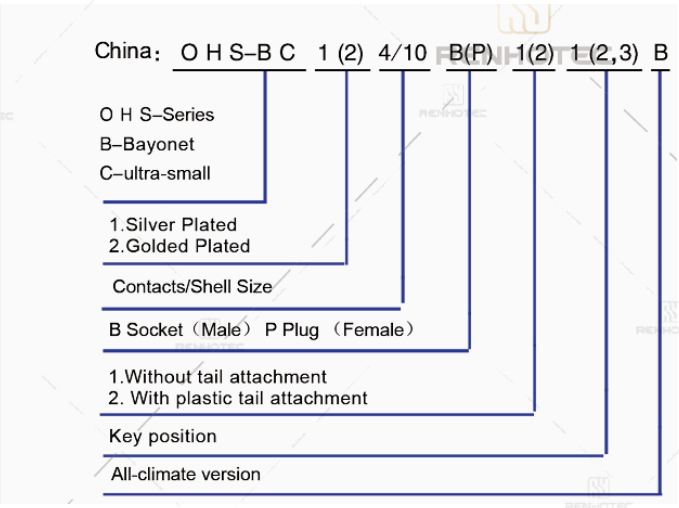

## Size

Socket without Tail Attachments (Male)

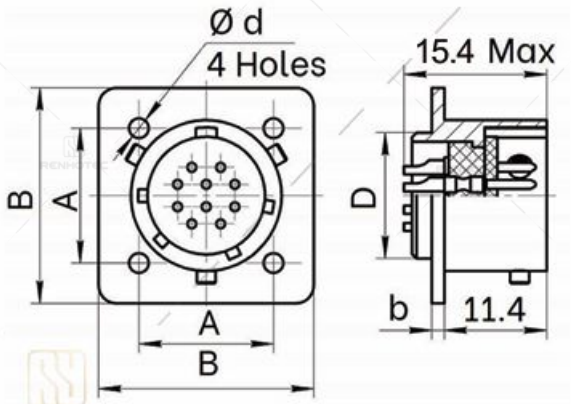


| Shell Size | Size(mm) | | | | |
|---|---|---|---|---|---|
| | D | d | A | B | b |
| 10 | 10 | 2.2 | 11.8 | 20 | 1.4 |
| 12 | 12 | 2.2 | 13.2 | 21 | 1.4 |
| 14 | 14 | 2.2 | 15 | 24 | 1.4 |
| 18 | 18 | 2.2 | 18 | 27 | 1.4 |
| 22 | 22 | 2.7 | 21.5 | 31 | 1.8 |
| 27 | 27 | 3.2 | 26 | 36 | 2 |

### Disclaimer

The information in this specification is subject to change without notice. Please confirm the latest version before use. Technical parameters are for reference only, and sufficient testing and verification should be conducted in actual applications.