ZH23 Series Shell Size 14 4 Pin Female Socket with Simple Tail Attachment

Part Number:

zh23-4_14P-1-B

Basic Information	
Connector Type	Socket
Orientation	Straight
Number of Positions	4 Pin
Contact Termination	Solder
Fastening Type	Bayonet Connection
Contact Size	Φ1.0
Series	ZH23 series bayonet connectors
Contact Type	Female
Shell Size	14

Mechanical Specification	
Durability	500 cycles
Mechanical and Working Life	500 Cycles

Material Specification	
Shell Material	Aluminum Alloy Surface Anodized Treatment, Zinc Alloy Nickel Plating (Industrial Grade)
Contact Material	Copper Alloy Gold
Contact Finish	gold

Electrical Specification

Rated Current	44A
Contact Resistance	≤7.4mΩ
Insulating Materials	PPS (industrial grade)/ High temperature resistant epoxy molding compound (mil grade)
Insulation Impedance	≥5000MΩ
Operating Voltage	700V
Test voltage	2100V

Environmental Specification

Operating Temperature	-60℃ - +200℃
Relative Humidity	40℃-65℃ 95%-98%
Impact	Acceleration 500g (Once); 150g (Multiple Times)
Salt Spray Resistance	96h
Vibration	Acceleration 40g (1-5000HZ)

Contact Layout

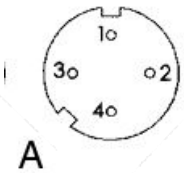

How to Order

China:

ZH23 – 3/ 14 B – 2 – b – B

ZH23 – 3/ 14 P – 6 –a – B

- Series
- Contacts
- Shell Size
- Gender: B(Male) P(Female)
- Tail attachments and connector type codes
- Key position
- all-climate version

Size

1 - Socket with simple tail attachment

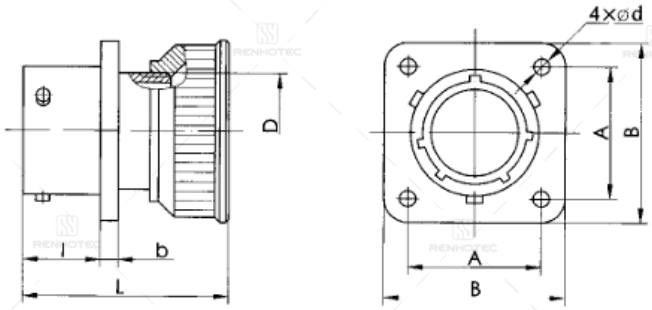

Model	Size in mm						
	A	Bmax	D	dmin	lmax	bmax	Lmax
СНЦ23–4/14В(Р)–1–В	16.5	21.7	M14×0.5	2.2	11.3	1.4	32.5
СНЦ23–3/14В(Р)–1–В							
СНЦ23–10/18В(Р)–1–В	19.5	25.9	M18×1	3.2			
СНЦ23–7/18В(Р)–1–В							
СНЦ23–19/22В(Р)–1–В	23	29.4	M22×1			1.8	
СНЦ23–10/22В(Р)–1–В							
СНЦ23–7/22В(Р)–1–В							
СНЦ23–19/24В(Р)–1–В	25	31.4	M24×1				
СНЦ23–32/27В(Р)–1–В	27	33.4	M27×1				
СНЦ23–19/27В(Р)–1–В							
СНЦ23–28/27В(Р)–1–В							
СНЦ23–41/30В(Р)–1–В	31	37.8	M30×1				
СНЦ23–24/30В(Р)–1–В							
СНЦ23–55/33В(Р)–1–В	34	41.5	M33×1		14.5	2	
СНЦ23–32/33В(Р)–1–В							
СНЦ23–61/36В(Р)–1–В	36.5	44.5	M36×1		15.3		
СНЦ23–43/36В(Р)–1–В							
СНЦ23–45/39В(Р)–1–В	40	46.4	M39×1				

Disclaimer

The information in this specification is subject to change without notice. Please confirm the latest version before use. Technical parameters are for reference only, and sufficient testing and verification should be conducted in actual applications.